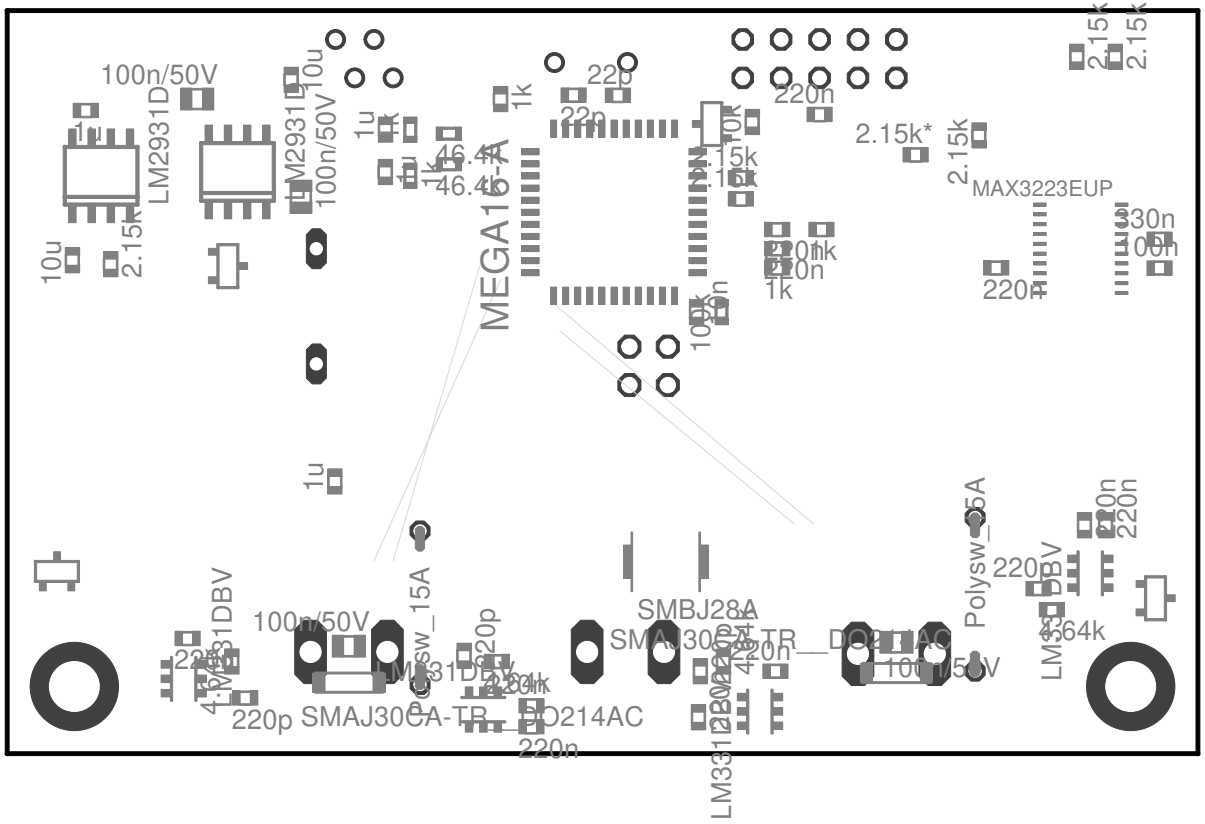

1/29/2008 19:44:46 f=2.00 mirrored /home/pp/eagle/trunk/analog/motor-power-avr/pcb/motor_power_avr.brd